# NODAL ANALYSIS

# Concept

- Developed based on the systematic approach of Kirchhoff's current law (KCL) to find all circuit variables without having to sacrifice any of the elements.
- General procedure which is making use of node voltages in circuit analysis as key solutions.

# Importance terms

- *<u>Node Voltage</u>: Potential difference between a marked node and the selected reference node.*
- *<u>Element Voltage</u>: Potential difference across any element or branch in the circuit.*

# Why use Node Voltage?

- Further reduce the number of equations to be solved simultaneously.
- No of independent equations = No of the marked nodes exclusive of the reference node.
- Element voltages and currents can be obtained in few steps using the solved node voltages.

# Nodal Analysis Procedures:

1. Mark all essential nodes and assign proper voltage designations except for the appointed reference node.
2. Apply KCL to each nonreference nodes. Use Ohm's law to formulate the equation in terms of node voltages. Assume all unknown currents are directing out of the nodes.
3. Solve the resulting simultaneous equations to obtain the unknown node voltages.

Applying Nodal Analysis on Simple Circuit and determine Voltage in different point

# *Example 1 (3 unknowns)*

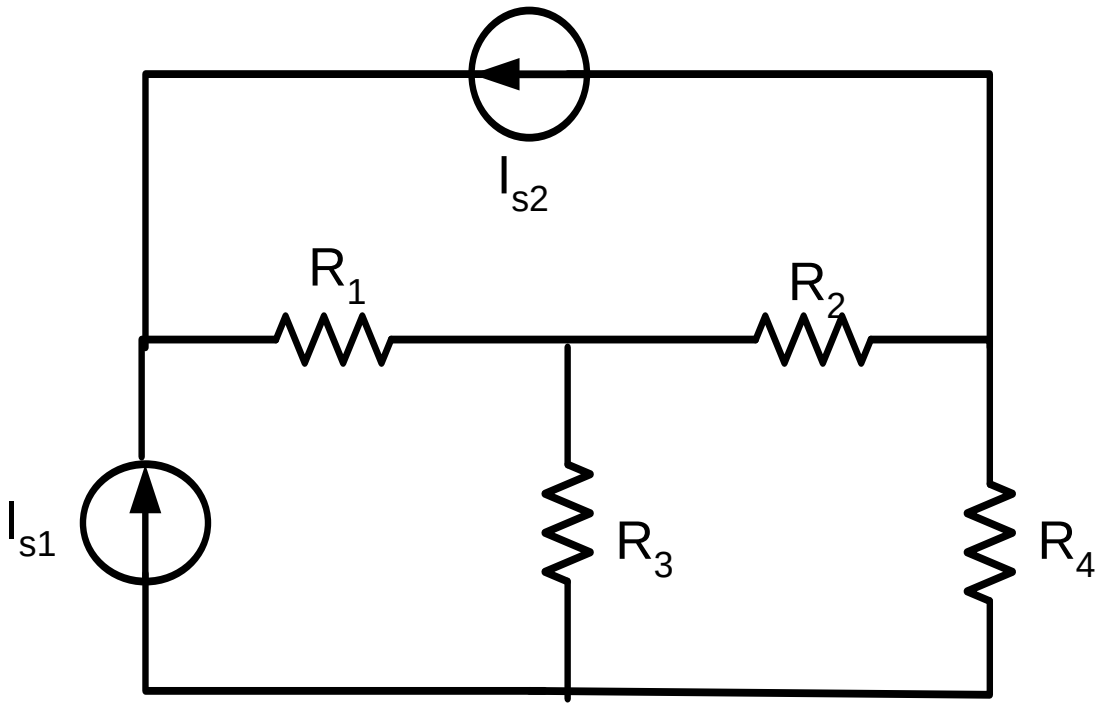

# Solution

*Step 1:*

- Mark all essential nodes
- Assign unknown node voltages
- Indicate the reference node.

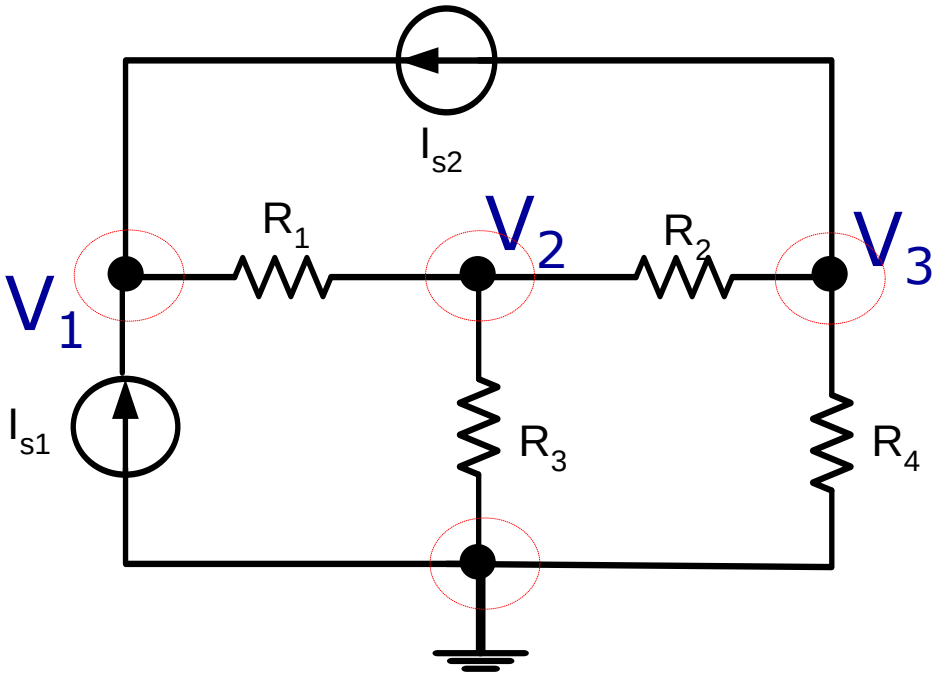

# Solution (continued…)

- *Step 2:* Perform KCL at each marked nonreference nodes using Ohm's law to formulate the equations in terms of the node voltages.

# Solution (continued…)

- KCL $V_1$: $$I_{s1} + I_{s2} = \frac{V_1 - V_2}{R_1} \qquad \textbf{(1)}$$

  or $$I_{s1} + I_{s2} = G_1(V_1 - V_2)$$

- KCL $V_2$: $$\frac{V_2 - V_1}{R_1} + \frac{V_2 - 0}{R_3} + \frac{V_2 - V_3}{R_2} = 0 \qquad \textbf{(2)}$$

- KCL $V_3$: $$I_{s2} + \frac{V_3 - V_2}{R_2} + \frac{V_3 - 0}{R_4} = 0 \qquad \textbf{(3)}$$

# Solution (continued…)

- *<u>Step 3:</u>* Solve the resulting simultaneous equations from step 2 above.

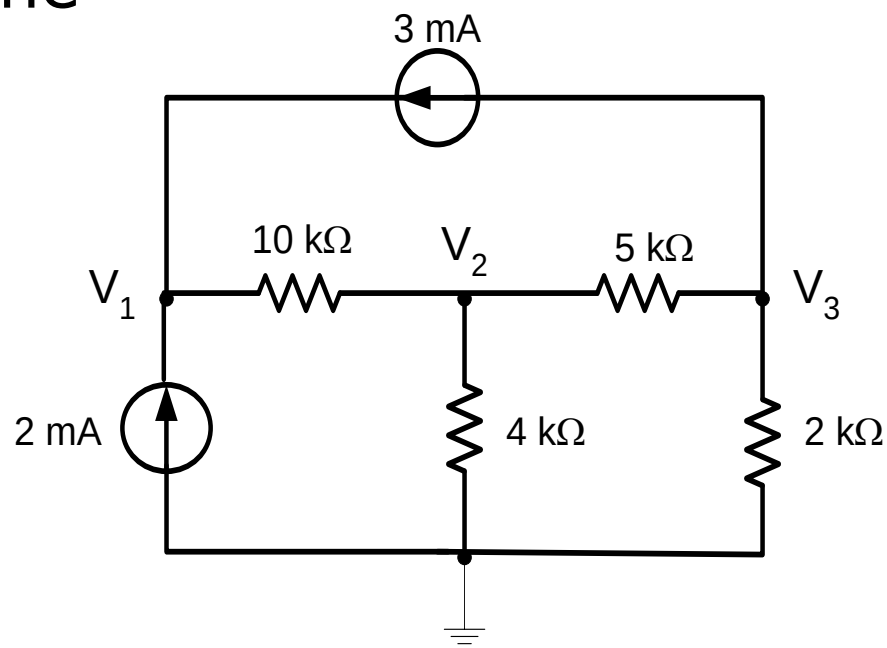

# Solution (continued…)

- KCL $V_1$: $$2m + 3m = \frac{V_1 - V_2}{10k}$$

  Simplify to $\boxed{V_1 - V_2 = 50}$ **(1)**

- KCL $V_2$: $$\frac{V_2 - V_1}{10k} + \frac{V_2 - 0}{4k} + \frac{V_2 - V_3}{5k} = 0$$

  Simplify to $\boxed{-2V_1 + 11V_2 - 4V_3 = 0}$ **(2)**

- KCL $V_3$: $$3m + \frac{V_3 - V_2}{5k} + \frac{V_3 - 0}{2k} = 0$$

  Simplify to $\boxed{-2V_2 + 7V_3 = -30}$ **(3)**

# Solving 1,2,3 equation We get

- $V_1$ = <u>60.55 V</u>
- $V_2$ =<u>10.55 V</u>
- $V_3$ = <u>-1.27 V</u>

.

# Which amount of power dissipated by the 10 kΩ resistor?

- Need to find the element voltage of 10-kΩ resistor because power calculation formula uses element voltage.

- $P_{10k\Omega} = (V_1 - V_2)^2/10k$
  $= (60.55 - 10.55)^2/10k$
  $= 50^2/10k = \underline{0.25\ W}$

## Applying Nodal Analysis on Simple Circuit and determine Voltage in different point

***Example 2 (2 unknowns)***

Q: Find the power dissipated in the 20-Ω resistor.

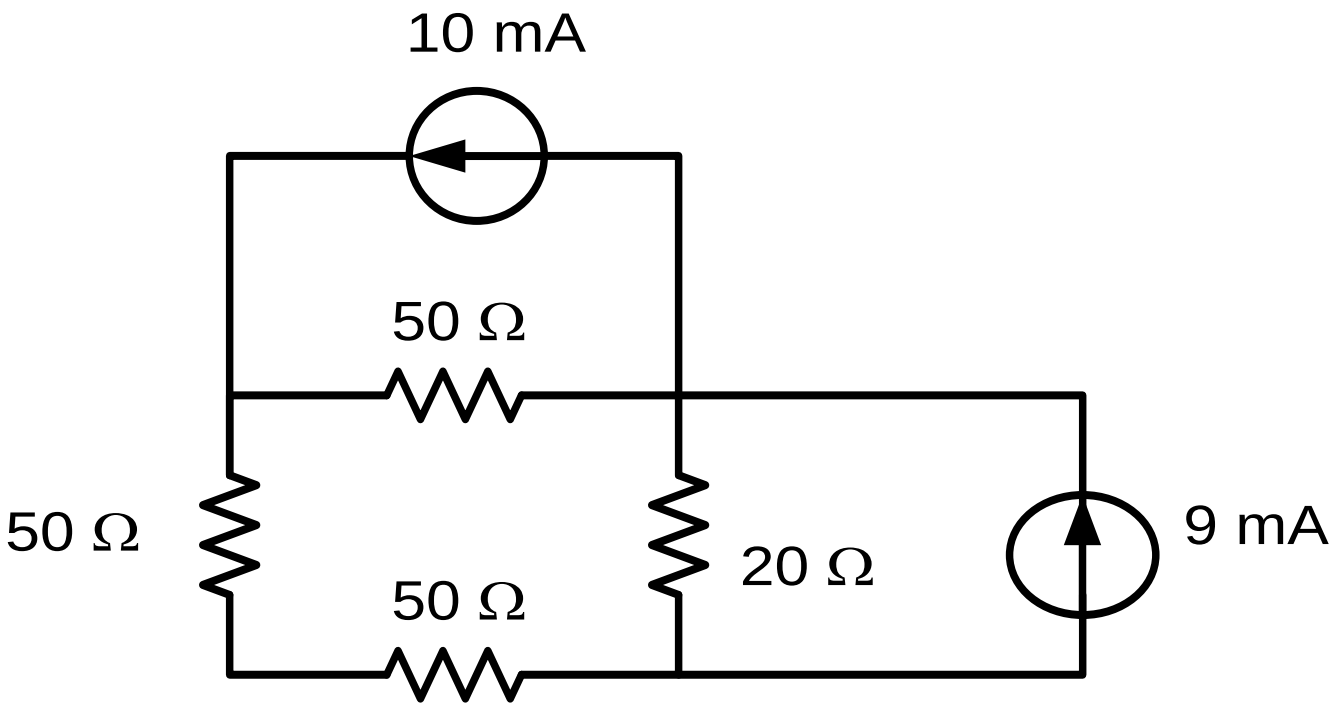

# Solution

*Step 1:*

- Mark all essential nodes
- Assign unknown node voltages
- Indicate the reference node.

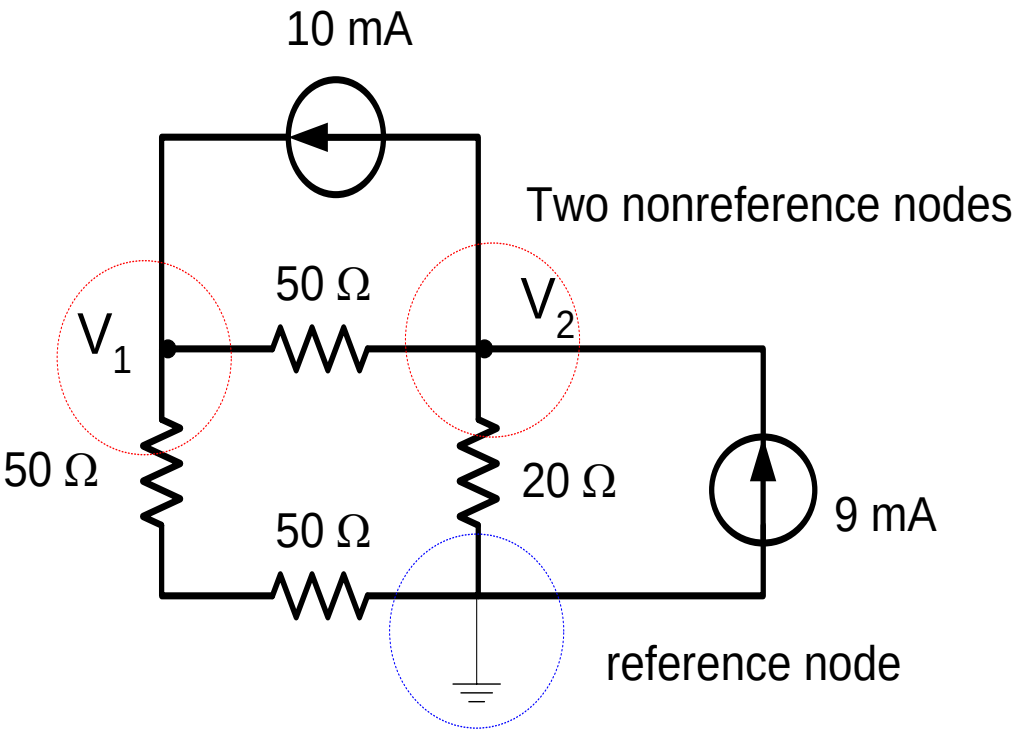

# Solution (Continued…)

- *Step 2:* Perform KCL at each marked nonreference nodes using Ohm's law to formulate the equations in terms of node voltages.

KCL $V_1$: $$\frac{V_1}{100} + \frac{V_1 - V_2}{50} = 10m$$

Hence $$3V_1 - 2V_2 = 1 \qquad \textbf{(1)}$$

KCL $V_2$: $$\frac{V_2}{20} + \frac{V_2 - V_1}{50} = 9m - 10m$$

Hence $$-2V_1 + 7V_2 = -0.1 \qquad \textbf{(2)}$$

# Solution (Continued…)

- *Step 3:* Solve the resulting simultaneous equations

Hence,

$V_1 = \underline{0.4\ V}$

$V_2 = \underline{0.1\ V}$

$P_{20\Omega} = V_2^2/20\Omega = 0.12(20) = 0.2\ W$

# *Supernode*

If the voltage source (dependent or independent) is connected between two nonreference nodes, the two nonreference nodes form a *generalized node* or *supernode*; we apply both KCL and KVL to determine the node voltages.

For the circuit shown in Fig. 3.9, find the node voltages.

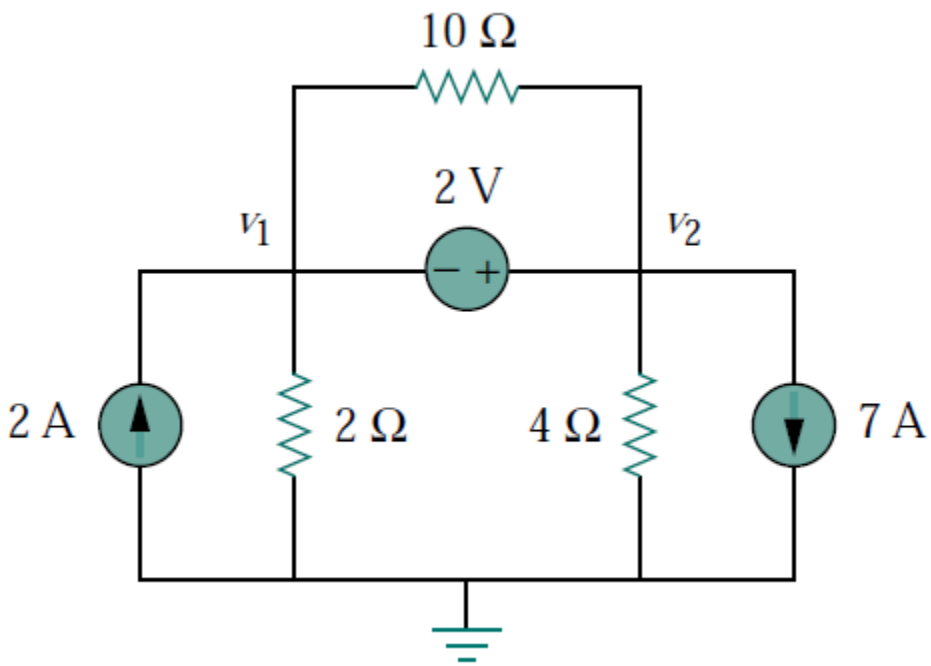

**Solution:**

The supernode contains the 2-V source, nodes 1 and 2, and the 10-Ω resistor. Applying KCL to the supernode as shown in Fig. 3.10(a) gives

$$2 = i_1 + i_2 + 7$$

Expressing $i_1$ and $i_2$ in terms of the node voltages

$$2 = \frac{v_1 - 0}{2} + \frac{v_2 - 0}{4} + 7 \qquad \Longrightarrow \qquad 8 = 2v_1 + v_2 + 28$$

or

$$v_2 = -20 - 2v_1 \tag{3.3.1}$$

To get the relationship between $v_1$ and $v_2$, we apply KVL to the circuit in Fig. 3.10(b). Going around the loop, we obtain

$$-v_1 - 2 + v_2 = 0 \qquad \Longrightarrow \qquad v_2 = v_1 + 2 \tag{3.3.2}$$

From Eqs. (3.3.1) and (3.3.2), we write

$$v_2 = v_1 + 2 = -20 - 2v_1$$

or

$$3v_1 = -22 \qquad \Longrightarrow \qquad v_1 = -7.333 \text{ V}$$

and $v_2 = v_1 + 2 = -5.333$ V. Note that the 10-Ω resistor does not make any difference because it is connected across the supernode.

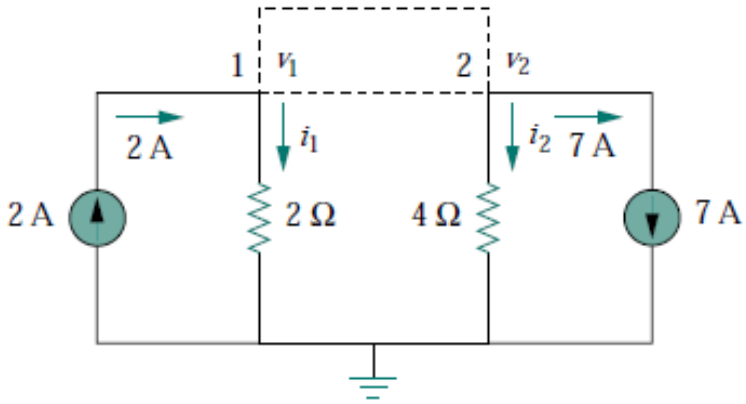


(a)

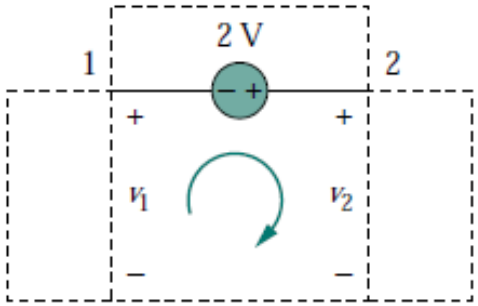


(b)

# *Example 3*
# *(Supernode or Known node voltage)*

- Q: Find the power of the 10-V voltage source? Is it supplying energy to the circuit or absorbing energy from the circuit? Show your work according to the nodal analysis procedure.

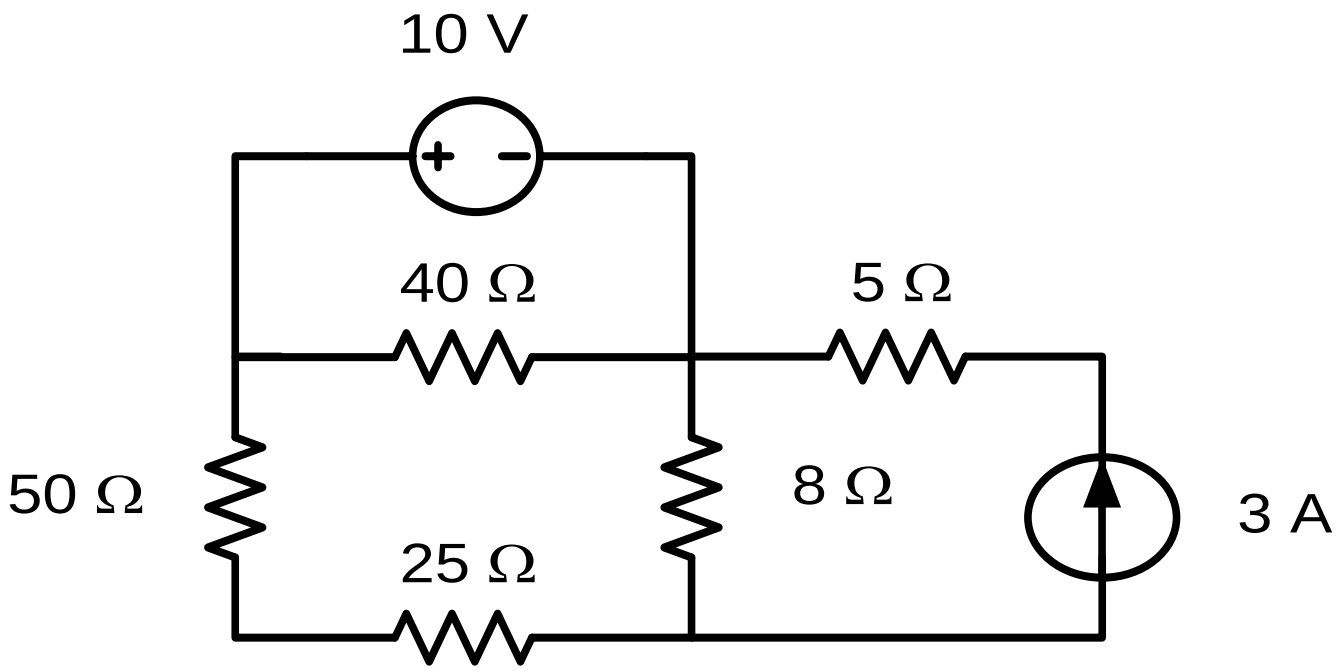

# Solution 1 (Supernode)

- *Step 1:* Mark essential nodes and assign unknown node voltages and indicate the reference node.

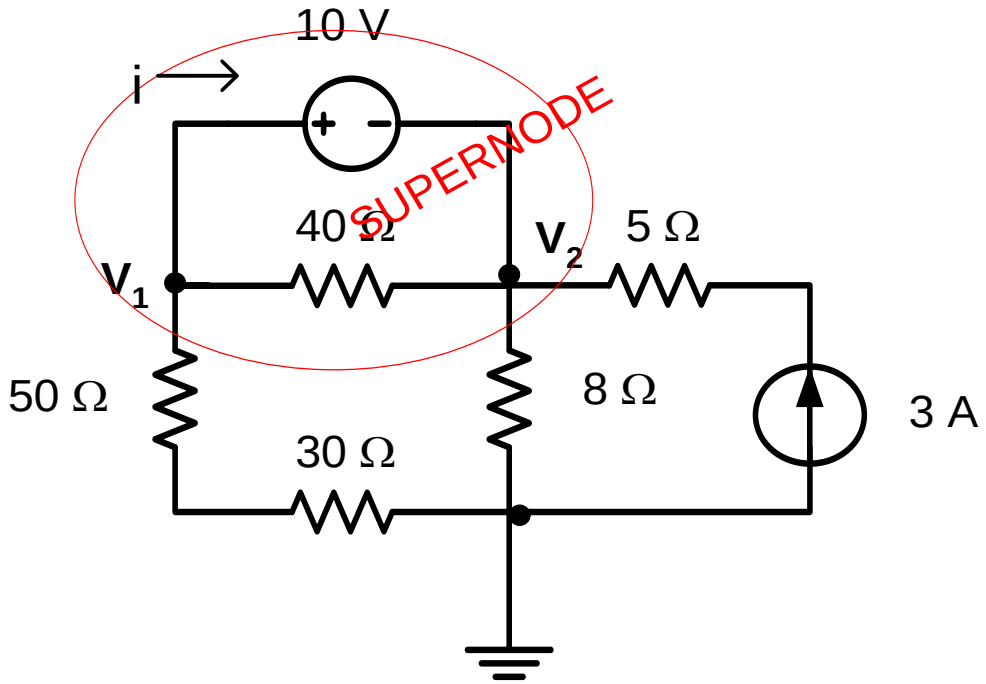


***Checklist:***

*3 essential nodes – 1 ref node – 1 supernode = 1 KCL Eqn. + 1 Supernode Eqn.*

# Solution 1 (Continued…)

- *Step 2:* Perform KCL at each marked nonreference nodes using Ohm's law to formulate the equations in terms of node voltages.

KCL supernode $V_1/V_2$:

$$\frac{V_1}{80} + \frac{V_2}{8} = 3$$

Hence

$$V_1 + 10V_2 = 240 \quad \textbf{(1)}$$

Supernode Equation:

$$V_1 - V_2 = 10 \quad \textbf{(2)}$$

# Solution 1 (Continued…)

- *Step 3:* Solve the resulting simultaneous equations which have been simplified in step 2 above.
- Solving Eqn. (1) and (2) simultaneously yields,
- $V_1$ = *30.91 V* and $V_2$ = *20.91 V*

# Applying Nodal Analysis on Circuit with Dependent Sources

- Circuits contain dependent sources either VCVS, CCVS, VCCS or CCCS.
- The presence of the dependent sources require ‘Constraint Equation’ (CE).
- CE describes the dependent term of the dependent sources in relation to the assigned unknown node voltages or known values at the essential nodes.

Find the node voltages in the circuit of Fig. 3.12.

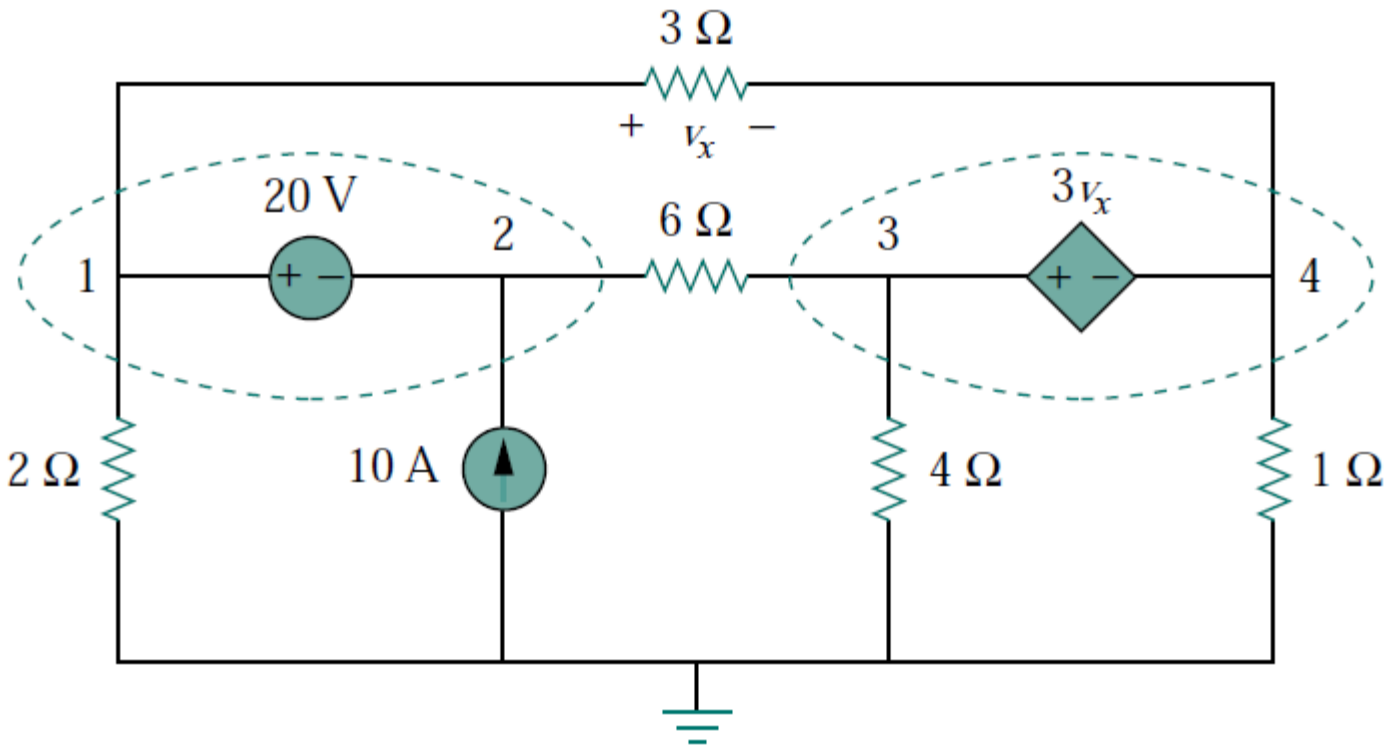

**Solution:**

Nodes 1 and 2 form a supernode; so do nodes 3 and 4. We apply KCL to the two supernodes as in Fig. 3.13(a). At supernode 1-2,

Expressing this in terms of the node voltages,

$$\frac{v_3 - v_2}{6} + 10 = \frac{v_1 - v_4}{3} + \frac{v_1}{2}$$

or

$$5v_1 + v_2 - v_3 - 2v_4 = 60 \tag{3.4.1}$$

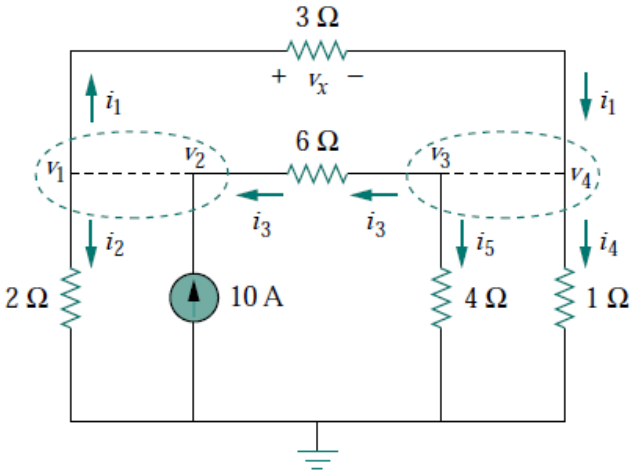

At supernode 3-4,

$$i_1 = i_3 + i_4 + i_5 \qquad \Longrightarrow \qquad \frac{v_1 - v_4}{3} = \frac{v_3 - v_2}{6} + \frac{v_4}{1} + \frac{v_3}{4}$$

or

$$4v_1 + 2v_2 - 5v_3 - 16v_4 = 0 \tag{3.4.2}$$

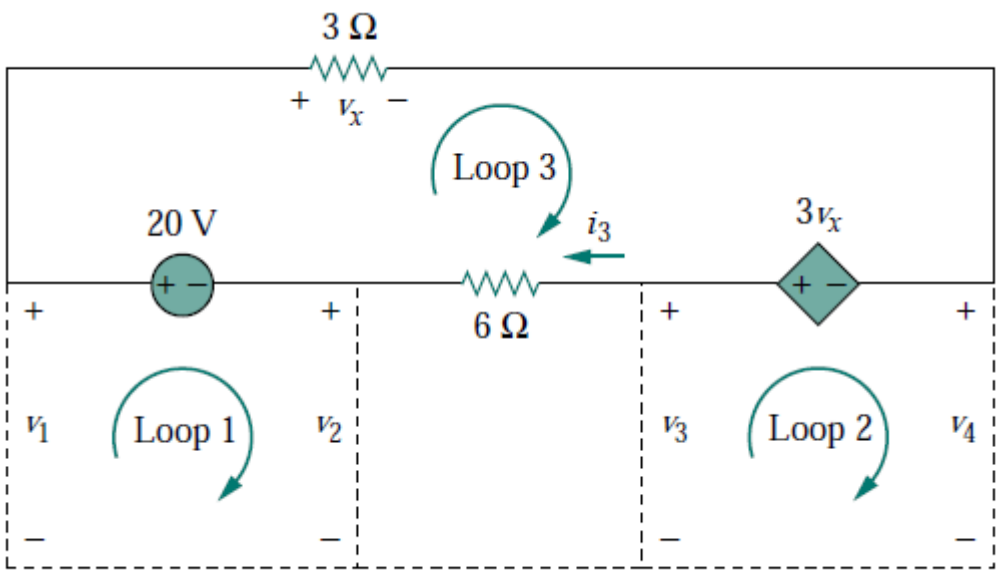


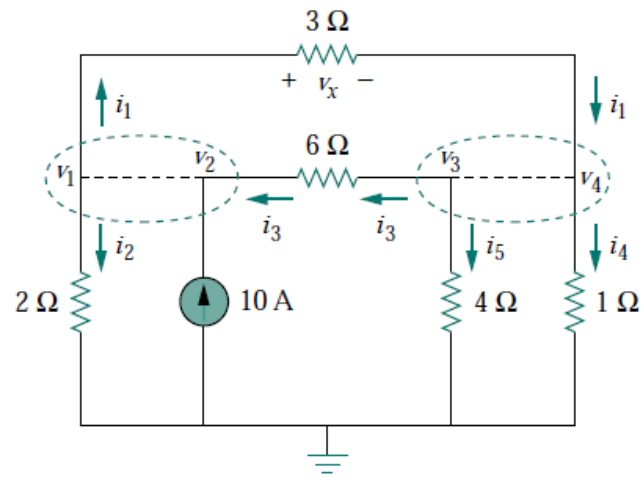

We now apply KVL to the branches involving the voltage sources as shown in Fig. 3.13(b). For loop 1,

$$-v_1 + 20 + v_2 = 0 \qquad \Longrightarrow \qquad v_1 - v_2 = 20 \tag{3.4.3}$$

For loop 2,

$$-v_3 + 3v_x + v_4 = 0$$

But $v_x = v_1 - v_4$ so that

$$3v_1 - v_3 - 2v_4 = 0 \tag{3.4.4}$$

For loop 3,

$$v_x - 3v_x + 6i_3 - 20 = 0$$

But $6i_3 = v_3 - v_2$ and $v_x = v_1 - v_4$. Hence

$$-2v_1 - v_2 + v_3 + 2v_4 = 20 \tag{3.4.5}$$

We need four node voltages, $v_1$, $v_2$, $v_3$, and $v_4$, and it requires only four out of the five Eqs. (3.4.1) to (3.4.5) to find them. Although the fifth equation is redundant, it can be used to check results. We can eliminate one node voltage so that we solve three simultaneous equations instead of four. From Eq. (3.4.3), $v_2 = v_1 - 20$. Substituting this into Eqs. (3.4.1) and (3.4.2), respectively, gives

$$6v_1 - v_3 - 2v_4 = 80 \tag{3.4.6}$$

and

$$6v_1 - 5v_3 - 16v_4 = 40 \tag{3.4.7}$$

Equations (3.4.4), (3.4.6), and (3.4.7) can be cast in matrix form as

$$\begin{bmatrix} 3 & -1 & -2 \\ 6 & -1 & -2 \\ 6 & -5 & -16 \end{bmatrix} \begin{bmatrix} v_1 \\ v_3 \\ v_4 \end{bmatrix} = \begin{bmatrix} 0 \\ 80 \\ 40 \end{bmatrix}$$

Using Cramer's rule,

$$\Delta = \begin{vmatrix} 3 & -1 & -2 \\ 6 & -1 & -2 \\ 6 & -5 & -16 \end{vmatrix} = -18, \qquad \Delta_1 = \begin{vmatrix} 0 & -1 & -2 \\ 80 & -1 & -2 \\ 40 & -5 & -16 \end{vmatrix} = -480$$

$$\Delta_3 = \begin{vmatrix} 3 & 0 & -2 \\ 6 & 80 & -2 \\ 6 & 40 & -16 \end{vmatrix} = -3120, \qquad \Delta_4 = \begin{vmatrix} 3 & -1 & 0 \\ 6 & -1 & 80 \\ 6 & -5 & 40 \end{vmatrix} = 840$$

Thus, we arrive at the node voltages as

$$v_1 = \frac{\Delta_1}{\Delta} = \frac{-480}{-18} = 26.667 \text{ V}, \qquad v_3 = \frac{\Delta_3}{\Delta} = \frac{-3120}{-18} = 173.333 \text{ V}$$

$$v_4 = \frac{\Delta_4}{\Delta} = \frac{840}{-18} = -46.667 \text{ V}$$

and $v_2 = v_1 - 20 = 6.667$ V. We have not used Eq. (3.4.5); it can be used to cross check results.

# *Example 5 (Circuit with dependent sources)*

- Q: Use the node-voltage method to find both dependent terms $i_O$ and $V_x$ of the dependent sources of the circuit in Figure below.

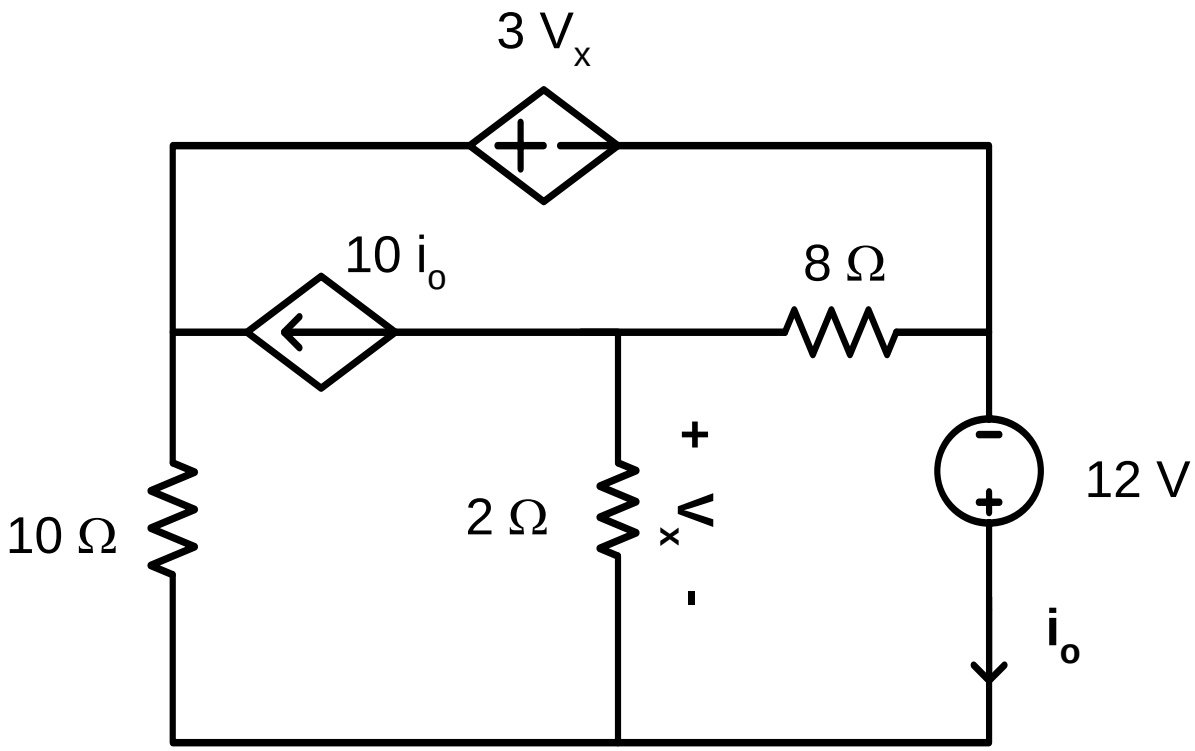

# Solution

- *Step 1:* Mark essential nodes and assign unknown node voltages and indicate the reference node.

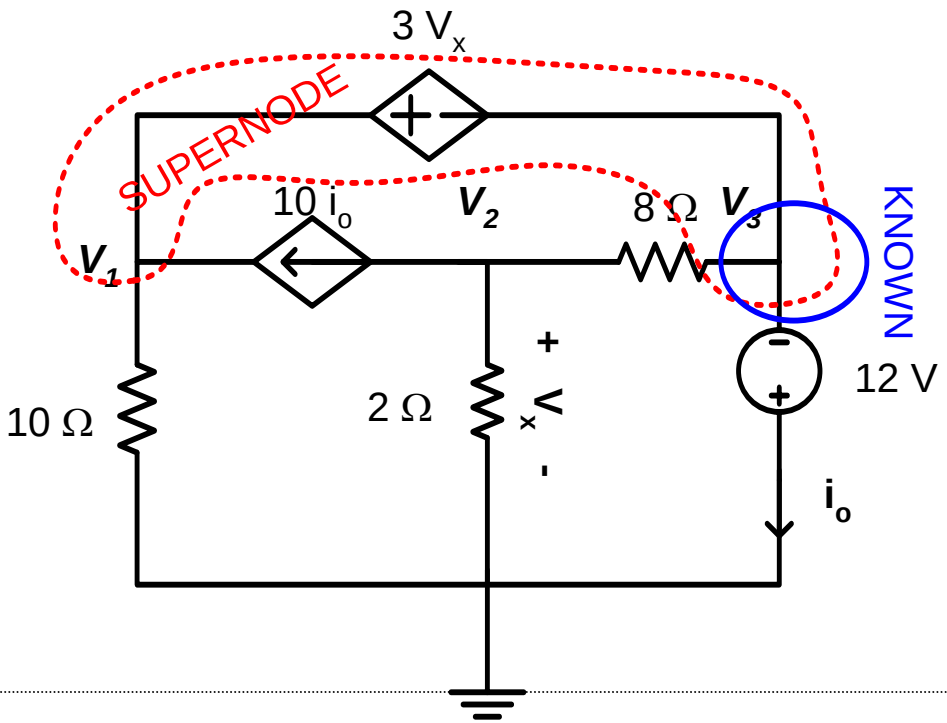


***Checklist:***

*4 essential nodes – 1 ref node – 1 s/node – 1 known*

*= 1 KCL Eqn. + 1 s/node Eqn. + 2 contraint Eqns.*

# *Solution (Continued…)*

- *<u>Step 2:</u>* Perform KCL at each marked nonreference nodes using Ohm's law to formulate the equations in terms of node voltages.

Known node voltage: $V_3 = -12\,V$

KCL s/node $V_2$: $$\frac{V_2}{2} + \frac{V_2 + 12}{8} = -10 i_o$$

Hence $$5V_2 + 80 i_o = -12 \qquad \textbf{(1)}$$

S/node equation: $$3V_x = V_1 + 12 \qquad \textbf{(2)}$$

# *Solution (Continued…)*

Constraint equations: $V_x = V_2$ **(3)**

and $$i_o = \frac{V_2 + 12}{8} - \frac{V_1}{10} + 10 i_o$$

Hence $$720 i_o - 8V_1 + 10V_2 = -120$$ **(4)**

Substituting Eqn. (3) into (2) yields

$$-V_1 + 3V_2 = 12$$ **(2′)**

# *Solution (Continued…)*

- *<u>Step 3:</u>* Solve the resulting simultaneous equations which have been simplified in step 2 above.
- Solving Eqn. (1), (2’) and (4) simultaneously yields,

$V_1$ = *<u>-6.51 V</u>*, $V_2$ = *<u>1.83 V</u> and* $i_o$ = *<u>-0.264 A</u>*

- *(You can check this answer by calculator and Cramer’s rule).*

# Find the node voltage of the following circuit

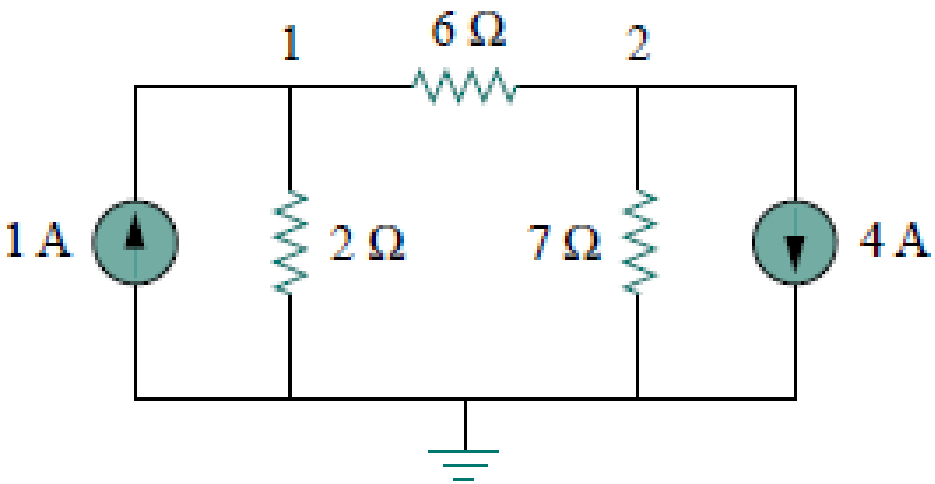


**Answer:** $v_1 = -2$ V, $v_2 = -14$ V.

# Find the node voltage of the following circuit

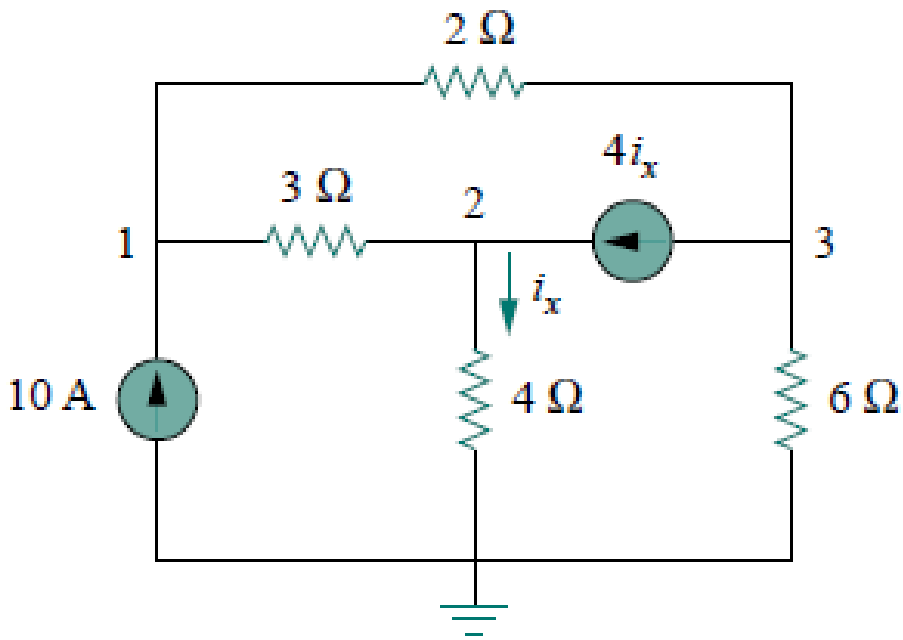


**Answer:** $v_1 = 80$ V, $v_2 = -64$ V, $v_3 = 156$ V.

# MESH ANALYSIS

# Concept

- Similar to nodal analysis.
- Developed based on the systematic approach of Kirchhoff's voltage law (KVL) to find all circuit variables without having to sacrifice any of the elements.
- General procedure which is making use of mesh current in circuit analysis as key solutions.

# Importance terms

- *<u>Mesh Current</u>: Assigned unknown current flows around the perimeter of the particular mesh/loop.*
- *<u>Element Current</u>: Actual current thru any element or branch in the circuit.*

# Mesh Analysis Procedures:

1. Label all independent meshes and assign proper unknown mesh currents in clockwise direction. Do the checklist.
2. Formulate KVL/Supermesh/Constraint Equation.
3. Solve the resulting simultaneous equations to obtain the unknown mesh current.

# Applying Mesh Analysis on Simple Circuit

Q: Find power dissipated in 12Ω-resistor and 3Ω-resistor using mesh analysis.

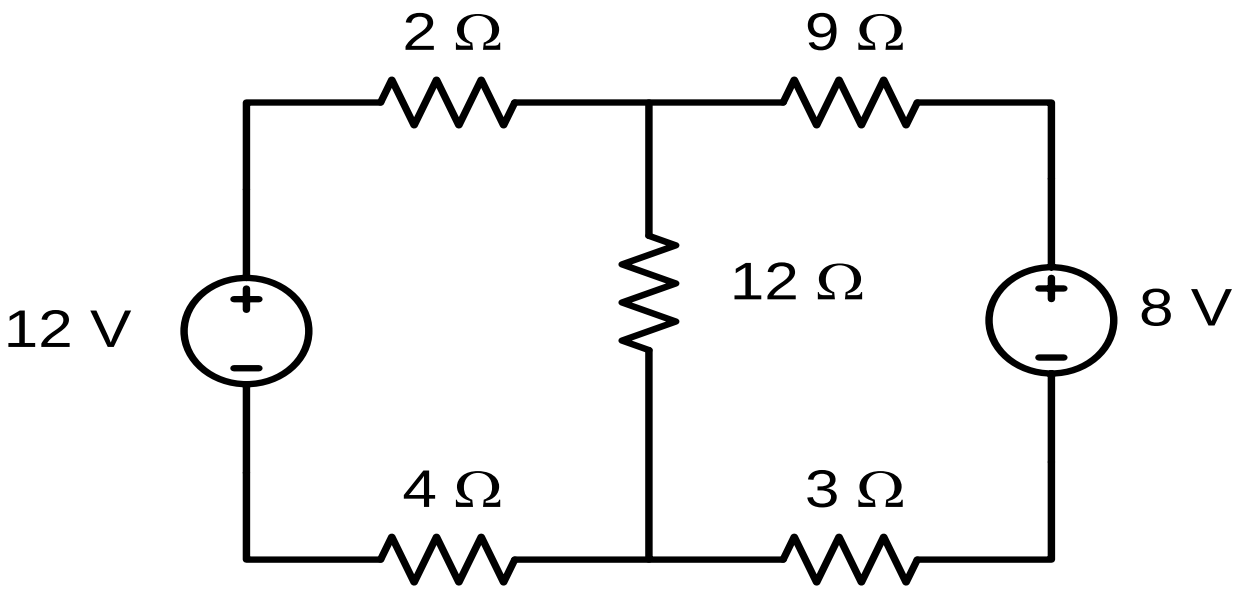

# Solution

1. Label all independent meshes and assign proper unknown mesh currents in clockwise direction.

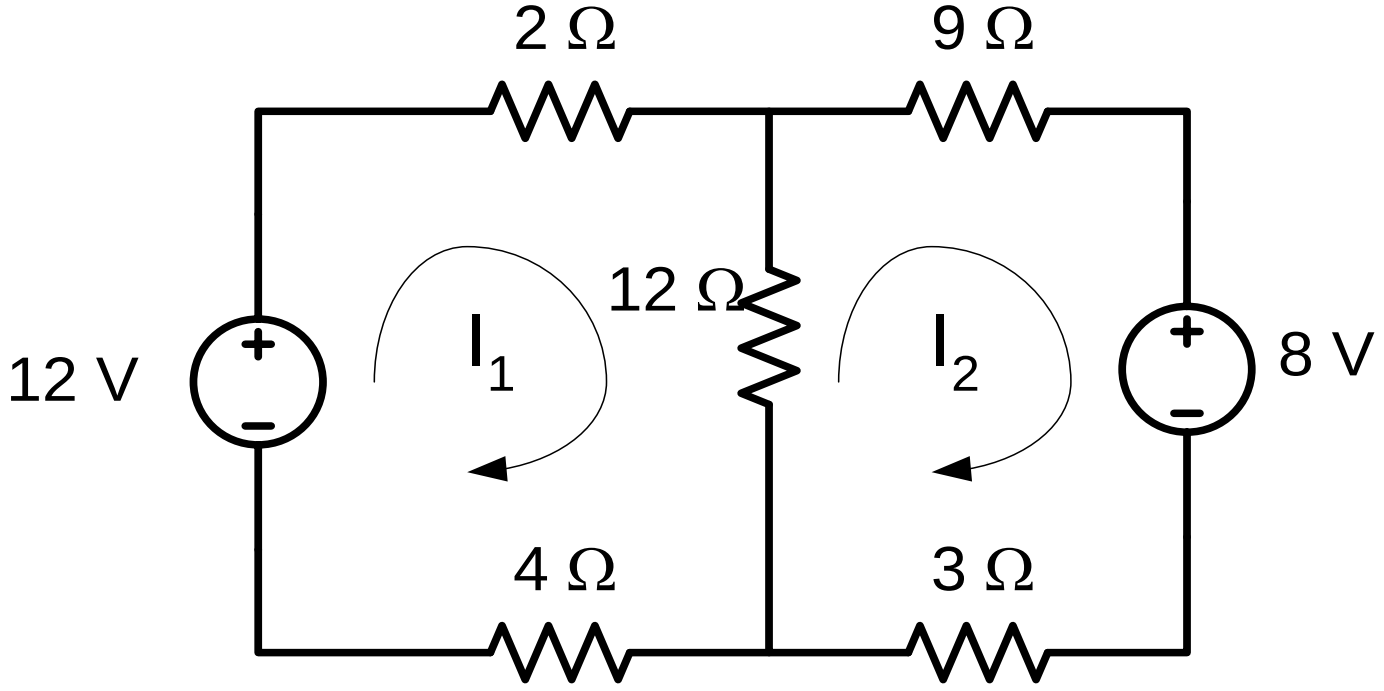


***Checklist:***

*2 meshes* = *2 KVL Eqns.*

# Solution (Continued…)

2. Formulate KVL/Supermesh/Constraint Eq.

- KVL $I_1$: $18I_1 - 12I_2 = 12$ ***(1)***
- KVL $I_2$: $-12I_1 + 24I_2 = -8$ ***(2)***

# Solution (Continued…)

3. Solve the resulting simultaneous equations to obtain the unknown mesh current.

- $I_1 = 0.667$ A
- $I_2 = 0$ A

# Example 2 ( Known current & dependent source)

- Find the voltage of the dependent source (CCCS).

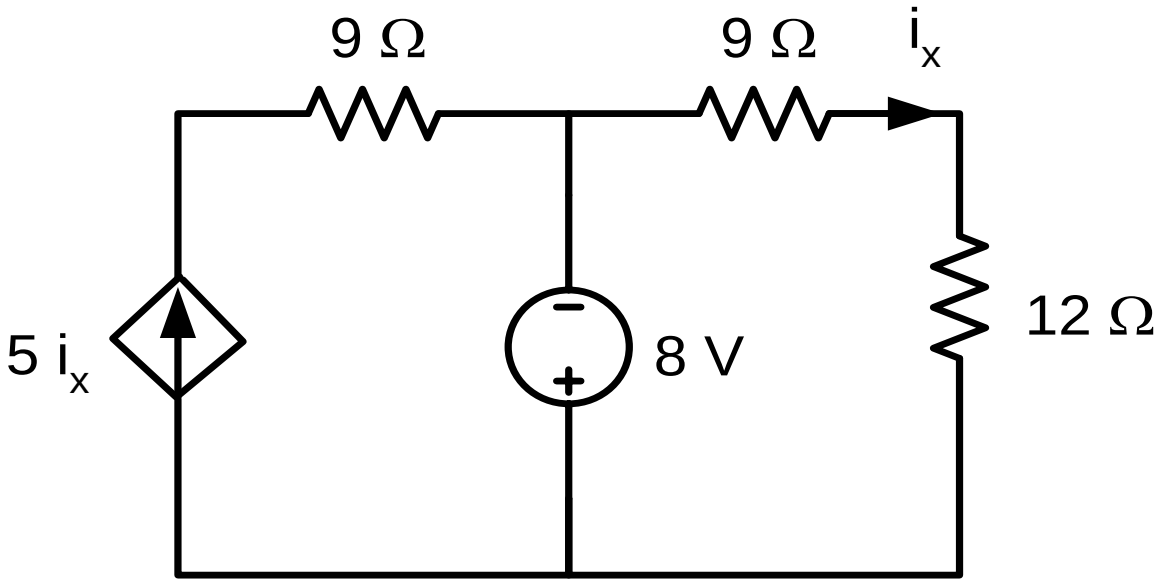

# Solution

- <u>Step 1:</u> Assign mesh currents in CW direction and perform checklist.

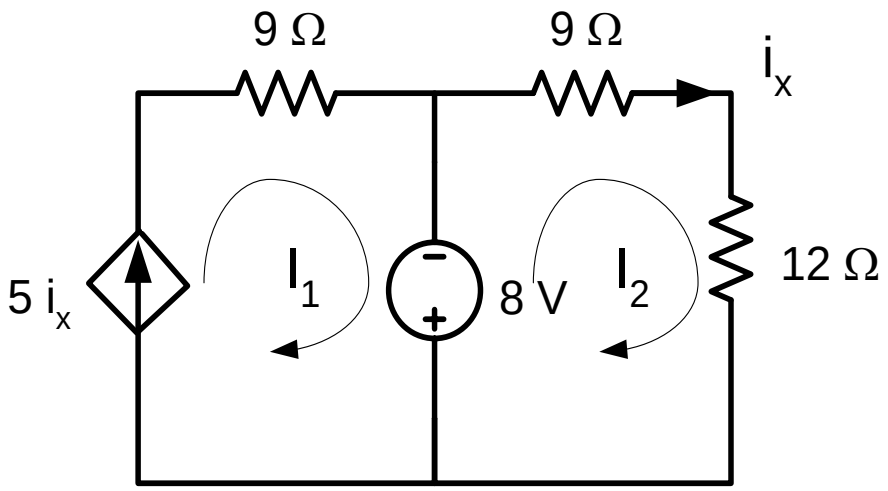


***Checklist:***

*2 meshes – I known = 1 KVL Eqn. + 1 CE*

# Solution (Continued…)

- <u>Step 2:</u> Formulate KVL/Constraint equations.
- Immediately known, $I_1 = 5i_x$ ***(1)***
- KVL $I_2$: $21I_2 = -8$ ***(2)***
- CE: $i_x = I_2$ ***(3)***

# Solution (Continued…)

- <u>Step 3:</u> Solve the simultaneous equations.
- Substitute (3) into (1) and solve (1) and (2) simultaneously, we obtain

- $I_1$ = <u>1.9048 A</u>  $I_2$ = <u>-0.3810 A</u>

Example 3.5
Practice problem 3.5
Example 3.6
Practice problem 3.6
Example 3.7
Practice problem 3.7

# SOURCE TRANSFORMATON

# Use Mesh Analysis to find the current $I_0$ in following circuit

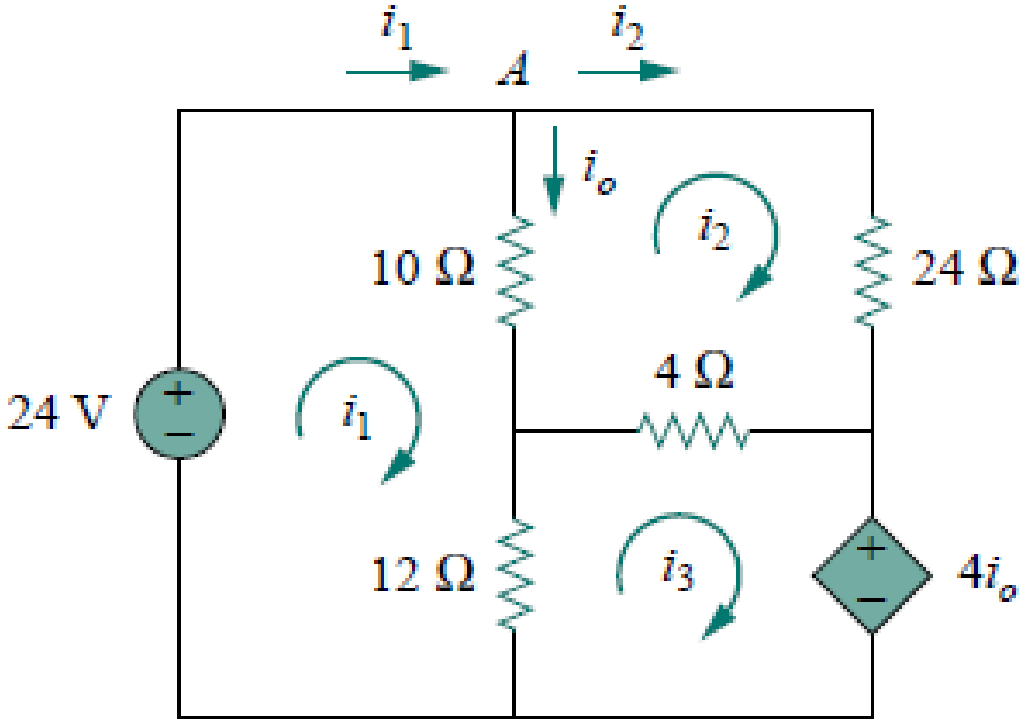

*Apply KVL At Loop 1*

$$24-10(i_1-i_2)-12(i_1-i_3)=0$$

$$11i_1-5i_2-6i_3=12\ldots\ldots(i)$$

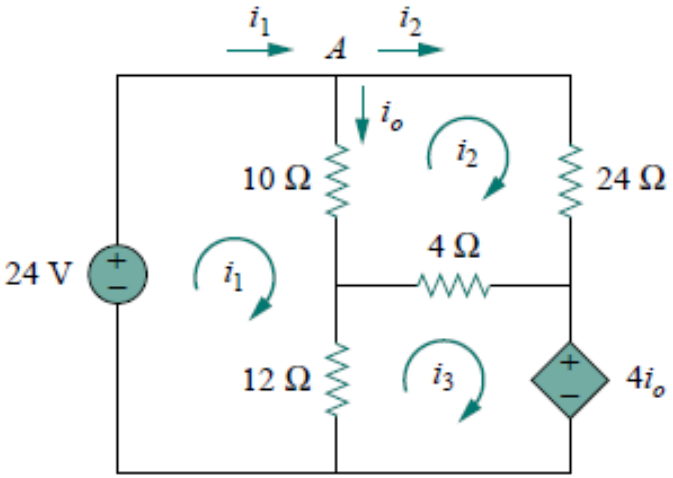


*Apply KVL At Loop 2*

$$-24i_2-4(i_2-i_3)-10(i_2-i_1)=0$$

$$-5i_1-19i_2-2i_3=0\ldots\ldots(ii)$$

*Apply KVL At Loop 3*

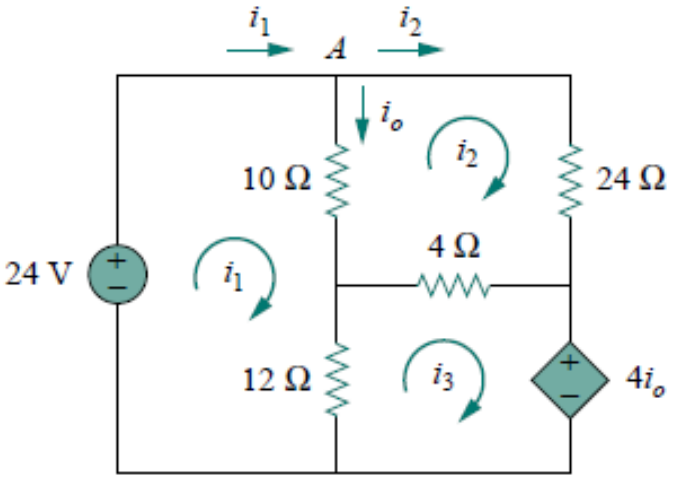


$$-4i_0-12(i_3-i_1)-4(i_3-i_2)=0$$

*But at node A,* $i_0=i_1-i_2$*,so that*

$$4(i_1-i_2)--12(i_3-i_1)-4(i_3-i_2)=0$$

$$-i_1-i_2-2i_3=0\ldots\ldots(iii)$$

# *In Matrix form, (i),(ii),(iii) become*

$$\begin{bmatrix} 11 & -5 & -6 \\ -5 & 19 & -2 \\ -1 & -1 & 2 \end{bmatrix} \begin{bmatrix} i_1 \\ i_2 \\ i_3 \end{bmatrix} = \begin{bmatrix} 12 \\ 0 \\ 0 \end{bmatrix}$$

We obtain the determinants as

$$\Delta = \begin{array}{cc} & \begin{vmatrix} 11 & -5 & -6 \\ -5 & 19 & -2 \\ -1 & -1 & 2 \end{vmatrix} \\ \begin{array}{c} - \\ - \\ - \end{array} & \begin{array}{c} 11 \quad -5 \quad -6 \\ -5 \quad 19 \quad -2 \\ -1 \quad -1 \quad 2 \end{array} \begin{array}{c} + \\ + \\ + \end{array} \end{array}$$

$$= 418 - 30 - 10 - 114 - 22 - 50 = 192$$

$$\Delta_1 = \begin{array}{c} \begin{vmatrix} 12 & -5 & -6 \\ 0 & 19 & -2 \\ 0 & -1 & 2 \end{vmatrix} \\ \begin{array}{ccc} - & - & - \end{array} \quad \begin{array}{ccc} + & + & + \end{array} \\ \begin{vmatrix} 12 & -5 & -6 \\ 0 & 19 & -2 \end{vmatrix} \end{array} = 456 - 24 = 432$$

$$\Delta_2 = \begin{array}{c} \begin{vmatrix} 11 & 12 & -6 \\ -5 & 0 & -2 \\ -1 & 0 & 2 \end{vmatrix} \\ \begin{array}{ccc} - & - & - \end{array} \quad \begin{array}{ccc} + & + & + \end{array} \\ \begin{vmatrix} 11 & 12 & -6 \\ -5 & 0 & -2 \end{vmatrix} \end{array} = 24 + 120 = 144$$

$$\Delta_3 = \begin{array}{c} \begin{vmatrix} 11 & -5 & 12 \\ -5 & 19 & 0 \\ -1 & -1 & 0 \end{vmatrix} \\ \begin{array}{ccc} - & - & - \end{array} \quad \begin{array}{ccc} + & + & + \end{array} \\ \begin{vmatrix} 11 & -5 & 12 \\ -5 & 19 & 0 \end{vmatrix} \end{array} = 60 + 228 = 288$$

We calculate the mesh currents using Cramer's rule as

$$i_1 = \frac{\Delta_1}{\Delta} = \frac{432}{192} = 2.25 \text{ A}, \qquad i_2 = \frac{\Delta_2}{\Delta} = \frac{144}{192} = 0.75 \text{ A}$$

$$i_3 = \frac{\Delta_3}{\Delta} = \frac{288}{192} = 1.5 \text{ A}$$

Thus, $i_o = i_1 - i_2 = 1.5$ A.

# Delta to Wye Conversion

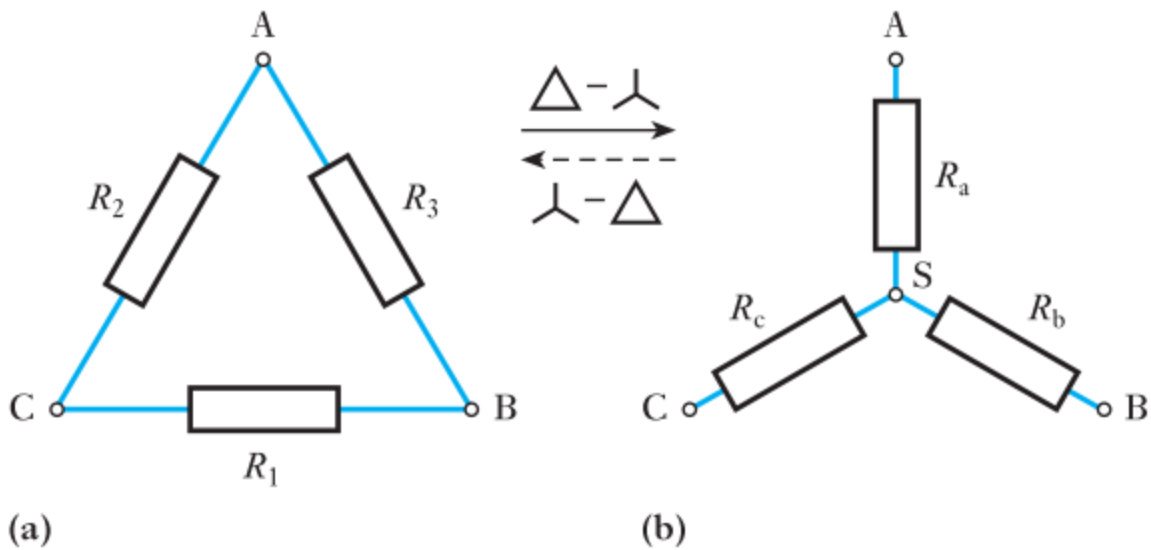

Figure 4.38(a) shows three resistors $R_1$, $R_2$ and $R_3$ connected in a closed mesh or *delta* to three terminals A, B and C, *their numerical subscripts* 1, 2 *and* 3 *being opposite to the terminals* A, B *and* C *respectively*. It is possible to replace these delta-connected resistors by three resistors $R_a$, $R_b$ and $R_c$ connected respectively between the same terminals A, B and C and a common point S, as in Fig. 4.38(b). Such an arrangement is said to be *star-connected*. It will be noted that the letter subscripts are now those of the terminals to which the respective resistors are connected. If the star-connected network is to be equivalent to the delta-connected network, the resistance between any two terminals in Fig. 4.38(b) must be the same as that between the same two terminals in Fig. 4.38(a). Thus, if we consider terminals A and B in Fig. 4.38(a), we have a circuit having a resistance $R_3$ in parallel with a circuit having resistances $R_1$ and $R_2$ in series; hence

$$R_{AB} = \frac{R_3(R_1 + R_2)}{R_1 + R_2 + R_3} \qquad [4.2]$$

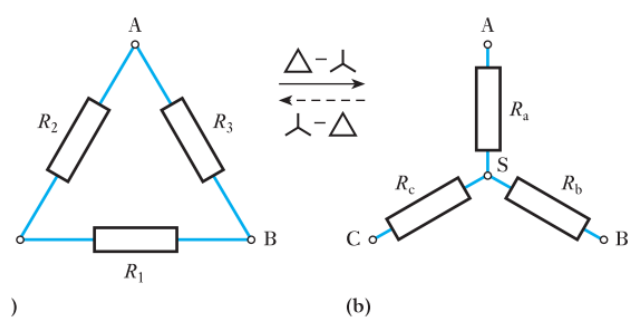


For Fig. 4.38(b), we have

$$R_{AB} = R_a + R_b$$

In order that the networks of Fig. 4.38(a) and (b) may be equivalent to each other, the values of $R_{AB}$ represented by expressions [4.2] and [4.3] must be equal.

$$\therefore \qquad R_a + R_b = \frac{R_1R_3 + R_2R_3}{R_1 + R_2 + R_3} \qquad [4.4]$$

Similarly

$$R_b + R_c = \frac{R_1R_2 + R_1R_3}{R_1 + R_2 + R_3} \qquad [4.5]$$

and

$$R_a + R_c = \frac{R_1R_2 + R_2R_3}{R_1 + R_2 + R_3} \qquad [4.6]$$

Subtracting equation [4.4] from [4.5] we have

$$R_a - R_c = \frac{R_2R_3 - R_1R_2}{R_1 + R_2 + R_3}$$

Adding equations [4.6] and [4.7] and dividing by 2, we have

$$R_a = \frac{R_2 R_3}{R_1 + R_2 + R_3} \qquad [4.8]$$

Similarly

$$R_b = \frac{R_3 R_1}{R_1 + R_2 + R_3} \qquad [4.9]$$

and

$$R_c = \frac{R_1 R_2}{R_1 + R_2 + R_3} \qquad [4.10]$$

These relationships may be expressed thus: *the equivalent star resistance connected to a given terminal is equal to the product of the two delta resistances connected to the same terminal divided by the sum of the delta resistances.*

Let us next consider how to replace the star-connected network of Fig. 4.38(b) by the equivalent delta-connected network of Fig. 4.38(a). Dividing equation [4.8] by equation [4.9], we have

$$\frac{R_a}{R_b} = \frac{R_2}{R_1}$$

$$\therefore \qquad R_2 = \frac{R_1 R_a}{R_b}$$

Similarly, dividing equation [4.8] by equation [4.10], we have

$$\frac{R_a}{R_c} = \frac{R_3}{R_1}$$

$$\therefore \qquad R_3 = \frac{R_1 R_a}{R_c}$$

Substituting for $R_2$ and $R_3$ in equation [4.8], we have

$$R_1 = R_b + R_c + \frac{R_b R_c}{R_a} \qquad [4.11]$$

Similarly

$$R_2 = R_c + R_a + \frac{R_c R_a}{R_b} \qquad [4.12]$$

and

$$R_3 = R_a + R_b + \frac{R_a R_b}{R_c} \qquad [4.13]$$

These relationships may be expressed thus: *the equivalent delta resistance between two terminals is the sum of the two star resistances connected to those terminals plus the product of the same two star resistances divided by the third star resistance.*

Each resistor in the $\Delta$ network is the sum of all possible products of Y resistors taken two at a time, divided by the opposite Y resistor.

The Y and $\Delta$ networks are said to be *balanced* when

$$R_1 = R_2 = R_3 = R_Y, \qquad R_a = R_b = R_c = R_\Delta$$

Under these conditions, conversion formulas become

$$\boxed{R_Y = \frac{R_\Delta}{3} \qquad \text{or} \qquad R_\Delta = 3R_Y}$$

Convert the Δ network in Fig. 2.50(a) to an equivalent Y network.

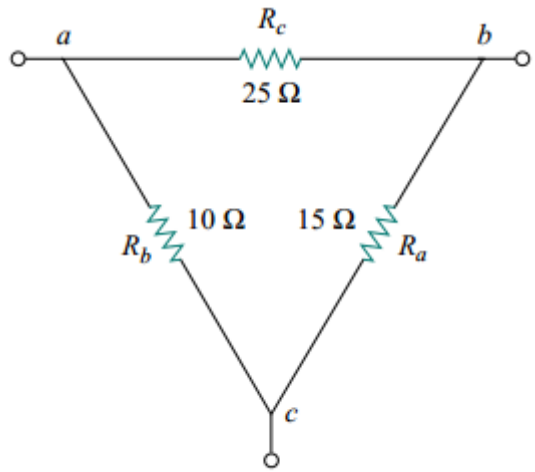


(a)

$$R_1 = \frac{R_b R_c}{R_a + R_b + R_c} = \frac{25 \times 10}{25 + 10 + 15} = \frac{250}{50} = 5\ \Omega$$

$$R_2 = \frac{R_c R_a}{R_a + R_b + R_c} = \frac{25 \times 15}{50} = 7.5\ \Omega$$

$$R_3 = \frac{R_a R_b}{R_a + R_b + R_c} = \frac{15 \times 10}{50} = 3\ \Omega$$

Obtain the equivalent resistance $R_{ab}$ for the circuit in Fig. 2.52 and use it to find current $i$.

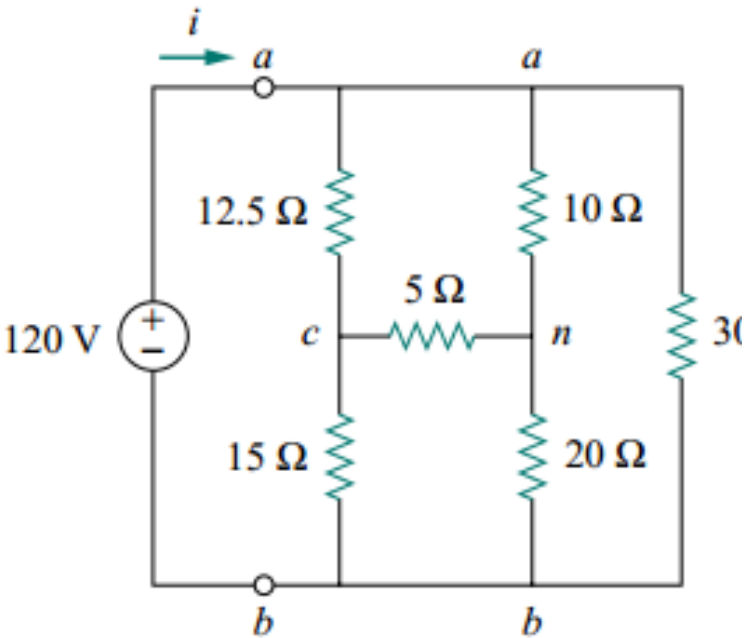


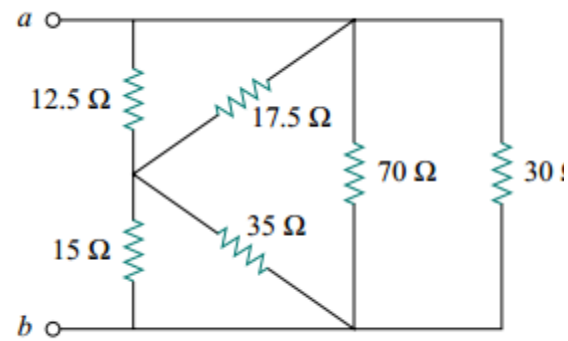


(a)

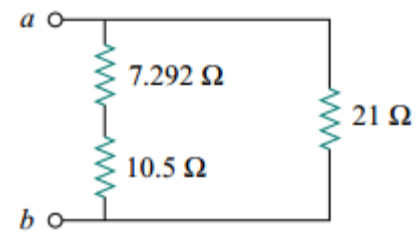


(b)

**Solution:**

In this circuit, there are two Y networks and one Δ network. Transforming just one of these will simplify the circuit. If we convert the Y network comprising the 5-Ω, 10-Ω, and 20-Ω resistors, we may select

$$R_1 = 10\ \Omega, \qquad R_2 = 20\ \Omega, \qquad R_3 = 5\ \Omega$$

Thus from Eqs. (2.53) to (2.55) we have

$$R_a = \frac{R_1R_2 + R_2R_3 + R_3R_1}{R_1} = \frac{10 \times 20 + 20 \times 5 + 5 \times 10}{10}$$

$$= \frac{350}{10} = 35\ \Omega$$

$$R_b = \frac{R_1R_2 + R_2R_3 + R_3R_1}{R_2} = \frac{350}{20} = 17.5\ \Omega$$

$$R_c = \frac{R_1R_2 + R_2R_3 + R_3R_1}{R_3} = \frac{350}{5} = 70\ \Omega$$

With the Y converted to $\Delta$, the equivalent circuit (with the voltage source removed for now) is shown in Fig. 2.53(a). Combining the three pairs of resistors in parallel, we obtain

$$70 \parallel 30 = \frac{70 \times 30}{70 + 30} = 21\ \Omega$$

$$12.5 \parallel 17.5 = \frac{12.5 \times 17.5}{12.5 + 17.5} = 7.2917\ \Omega$$

$$15 \parallel 35 = \frac{15 \times 35}{15 + 35} = 10.5\ \Omega$$

so that the equivalent circuit is shown in Fig. 2.53(b). Hence, we find

$$R_{ab} = (7.292 + 10.5) \parallel 21 = \frac{17.792 \times 21}{17.792 + 21} = 9.632\ \Omega$$

Then

$$i = \frac{v_s}{R_{ab}} = \frac{120}{9.632} = 12.458\ \text{A}$$